URBACO

Technical sheet

Pneumatic Automatic retractable bollard
ATHENA Model Ø 120/5", Height 500/20"

Ref. BPATND50

Impact resistance	Tested durability	Weight
2,400 joules	4 Million operation cycles	58 Kg/127.87 lb

Material	Thickness	Colors
Cast steel	11 mm/0.4"	Standard URBACO paint RAL colors (optional)

Fittings	Functioning
- Lower limit switch - I.P.67 air distribution set (with valve 25m/27.3 yars air tube and connections).	According to PLC program The user will lower the bollard with a proximity card, remote control, radio beeper, etc. The bollard will automatically or manually rise again

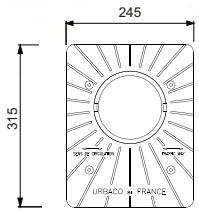

LEGEND :
1 - casing
2 - cover
3 - bollard head
4 - reflecting tape

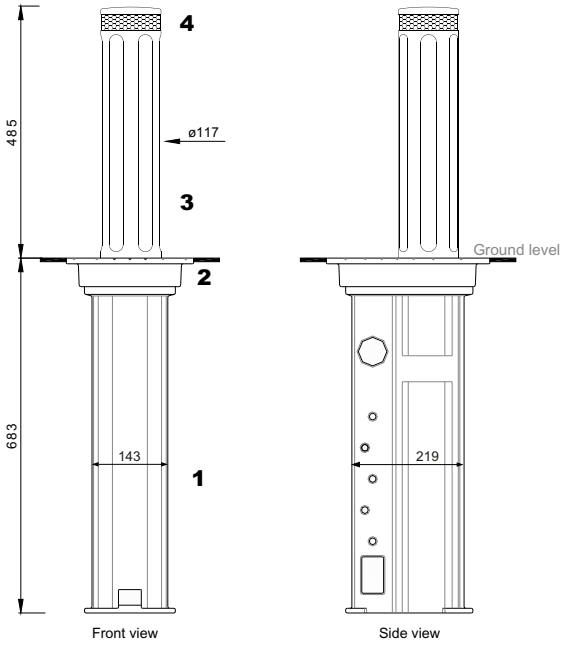

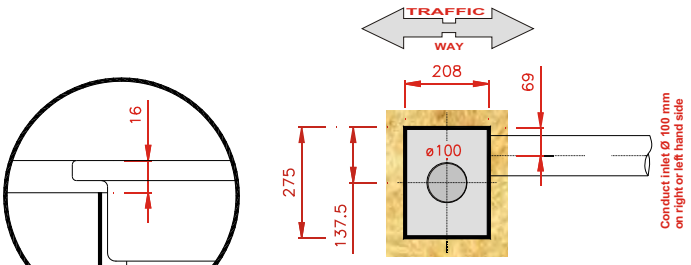

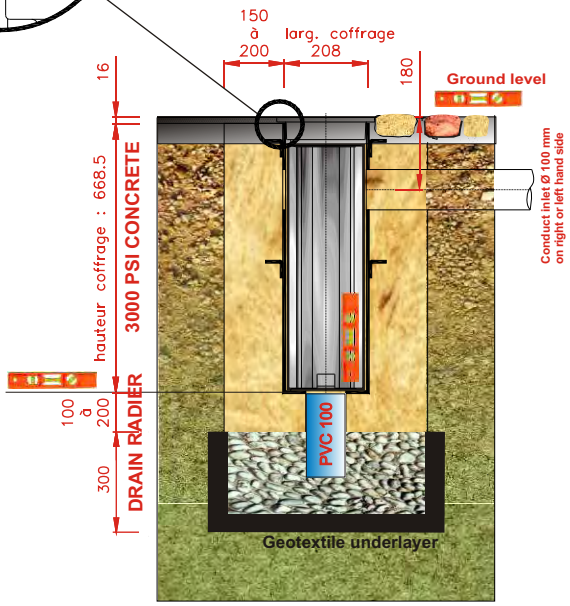

NOTA : Natural permeable soil for drainage.
(otherwise PVC tube should be connected to rainwater or sewage pipes)

INSTALLATION PLAN
for lost casing ref. BOCOFD667

Z.A. Du Couquiou - 84320 ENTRAIGUES - FRANCE
Tél. : (33) 04 90 48 08 08 - Fax : (33) 04 90 48 00 88
e-mail : urbaco@urbaco.fr

Propriété intellectuelle de URBACO - Ne peut être copié - Spécifications non contractuelles - Modifications possibles sans préavis

URBACO

Technical sheet

Pneumatic Automatic retractable bollard
ATHENA Model Ø 120/5", Height 750/30"

Ref. BPATND75

Impact resistance	Tested durability	Weight
2,400 joules	4Million operation cycles	69 Kg/152.12 lb

Material	Thickness	Colors
Cast steel	11 mm/0.4"	Standard URBACO paint RAL colors (optional)

Fittings	Functioning
- Lower limit switch - I.P.67 air distribution set (with valve 25m/27.3 yars air tube and connections).	According to PLC program The user will lower the bollard with a proximity card, remote control, radio beeper, etc. The bollard will automatically or manually rise again.

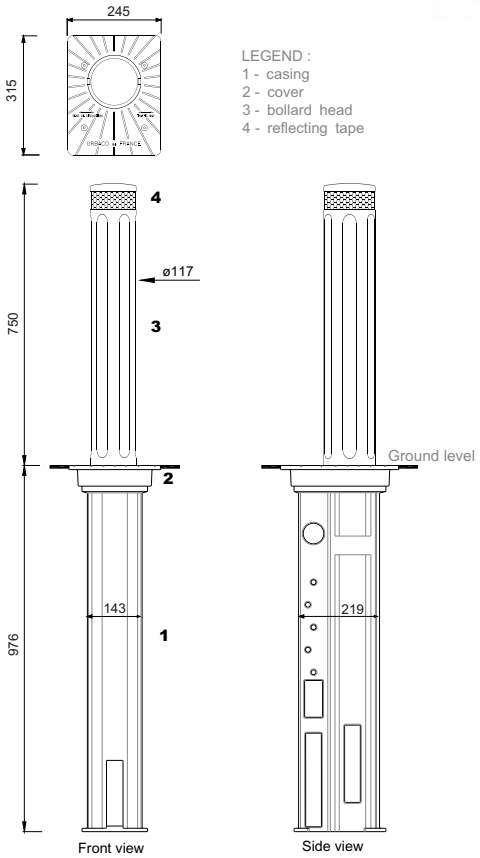

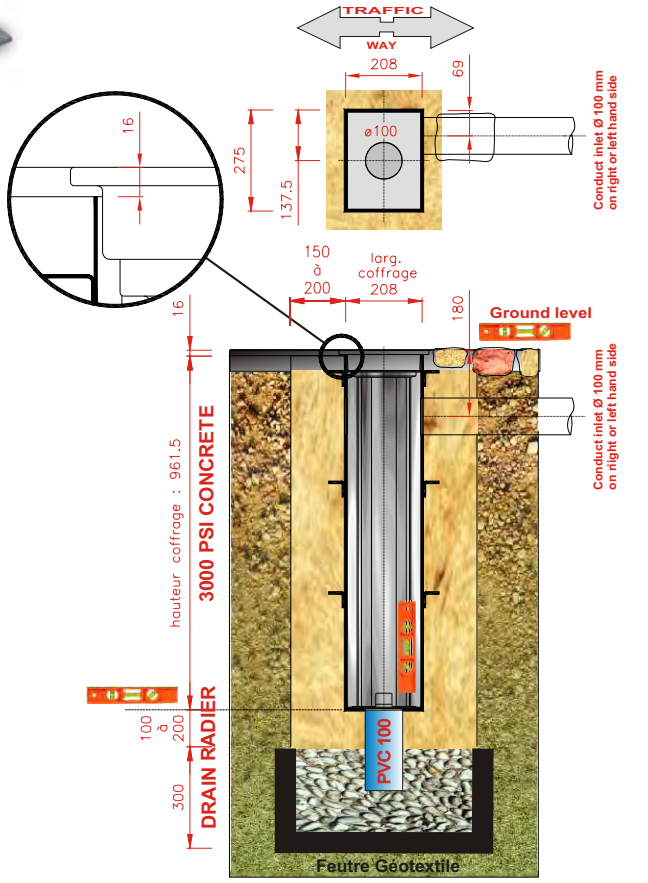

NOTA : Natural permeable soil for drainage.
(otherwise PVC tube should be connected to rainwater or sewage pipes)

INSTALLATION PLAN
for lost casing ref. BOCOFD960

Z.A. Du Couquiou - 84320 ENTRAIGUES - FRANCE
Tél. : (33) 04 90 48 08 08 - Fax : (33) 04 90 48 00 88
e-mail : urbaco@urbaco.fr

Propriété intellectuelle de URBACO - Ne peut être copié - Spécifications non contractuelles - Modifications possibles sans préavis

Technical sheet

Pneumatic automatic retractable bollard
ATHENA Model Ø200/8", Height 500/20"

Réf. BPATNE50

Impact resistance	Tested durability	Weight
5,000 joules	4.5Million operation cycles	84 kg/185.19 lb

Material	Thickness	Colors
Cast steel	11 mm/0.4"	Standard URBACO paint RAL colors (optional)

Fittings	Functioning
- Lower limit switch - I.P.67 air distribution set (with valve 25m/27.3 yars air tube and connections).	According to PLC program. The user will lower the bollard with a proximity card, remote control, digital keypad, etc. The bollard will automatically or manually rise again.

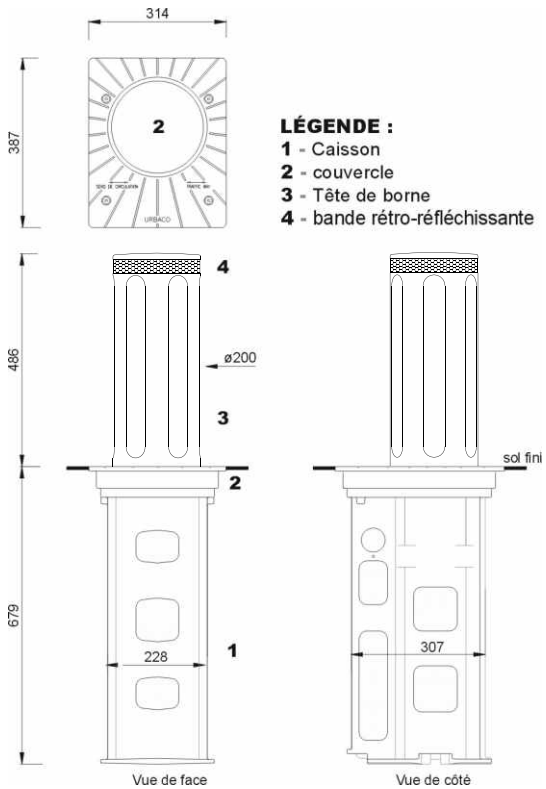

Z.A. Du Couquiou - 84320 ENTRAIGUES - FRANCE
Tél. : (33) 04 90 48 08 08 - Fax : (33) 04 90 48 00 88
e-mail : urbaco@urbaco.fr

Propriété intellectuelle de URBACO - Ne peut être copié - Spécifications non contractuelles - Modifications possibles sans préavis

Technical sheet

Pneumatic automatic retractable bollard

ATHENA Model Ø 200/8", Height 750/30"

Ref. BPATNE75

Impact resistance	Tested durability	Weight
5,000 joules	4.5 Million operation cycles	109 Kg/240.30 lb

Material	Thickness	Colors
Cast steel	11 mm/0.4"	Standard URBACO paint RAL colors (optional)

Fittings	Functioning
- Lower limit switch - I.P.67 air distribution set (with valve 25m/27.3 yars air tube and connections).	According to PLC program. The user will lower the bollard with a proximity card, remote control, digital keypad, etc. The bollard will automatically or manually rise again.

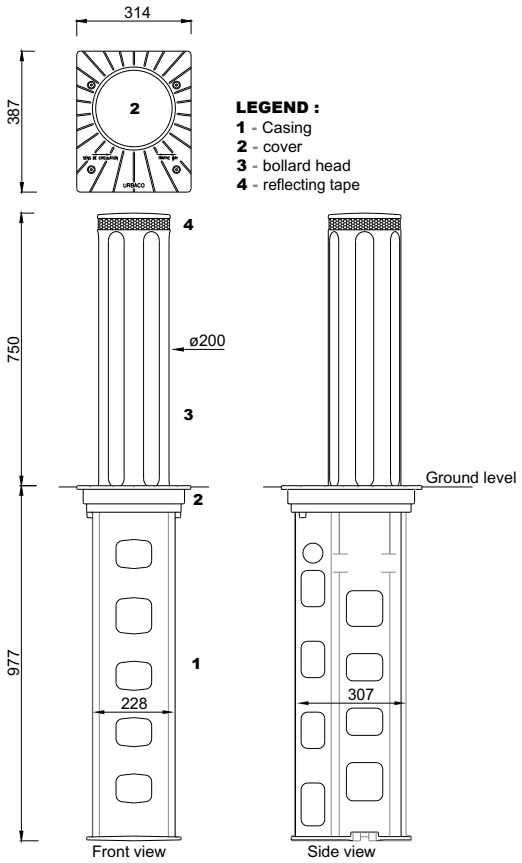

Z.A. Du Couquiou - 84320 ENTRAIGUES - FRANCE
Tél. : (33) 04 90 48 08 08 - Fax : (33) 04 90 48 00 88
e-mail : urbaco@urbaco.fr

Propriété intellectuelle de URBACO - Ne peut être copié - Spécifications non contractuelles - Modifications possibles sans préavis

URBACO

Technical sheet

Pneumatic automatic retractable bollard

ATHENA Model Ø250/10", Height 500/20"

Réf. BPATNF50

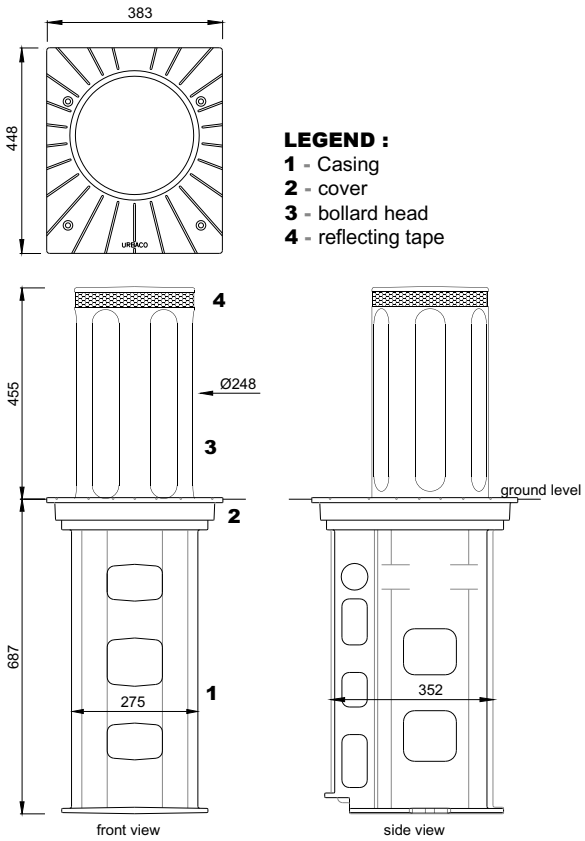

Impact resistance	Tested durability	Weight
9,000 joules	4.5 Million operation cycles	118 Kg/260.15 lb

Material	Thickness	Colors
Cast steel	11 mm/0.4"	Standard URBACO paint RAL colors (optional)

Fittings	Functioning
- Lower limit switch - I.P.67 air distribution set (with valve 25m/27.3 yars air tube and connections).	According to PLC program. The user will lower the bollard with a proximity card, remote control, digital keypad, etc. The bollard will automatically or manually rise again.

Z.A. Du Couquiou - 84320 ENTRAIGUES - FRANCE
Tél. : (33) 04 90 48 08 08 - Fax : (33) 04 90 48 00 88
e-mail : urbaco@urbaco.fr

Propriété intellectuelle de URBACO - Ne peut être copié - Spécifications non contractuelles - Modifications possibles sans préavis

URBACO

Technical sheet

Pneumatic automatic retractable bollard

ATHENA Model Ø250/10", Height 500/20"

Réf. BPATNF50

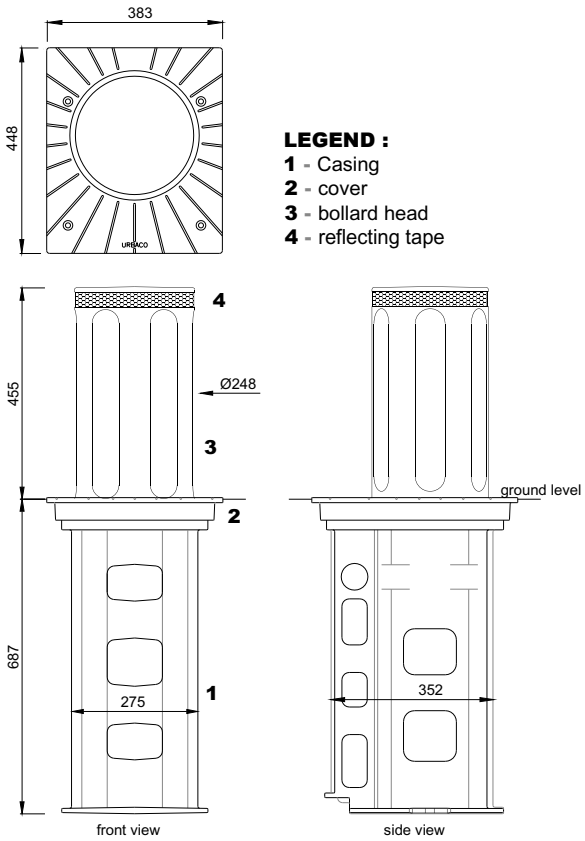

Impact resistance	Tested durability	Weight
9,000 joules	4.5 Million operation cycles	118 Kg/260.15 lb

Material	Thickness	Colors
Cast steel	11 mm/0.4"	Standard URBACO paint RAL colors (optional)

Fittings	Functioning
- Lower limit switch - I.P.67 air distribution set (with valve 25m/27.3 yars air tube and connections).	According to PLC program. The user will lower the bollard with a proximity card, remote control, digital keypad, etc. The bollard will automatically or manually rise again.

Z.A. Du Couquiou - 84320 ENTRAIGUES - FRANCE
Tél. : (33) 04 90 48 08 08 - Fax : (33) 04 90 48 00 88
e-mail : urbaco@urbaco.fr

Propriété intellectuelle de URBACO - Ne peut être copié - Spécifications non contractuelles - Modifications possibles sans préavis

URBACO

Technical sheet

Pneumatic automatic retractable bollard

ATHENA Model Ø250/10", Height 750/30"

Ref. BPATNF75

Impact resistance	Tested durability	Weight
9,000 joules	4.5 Million operation cycles	154 Kg/339.51 lb

Material	Thickness	Colors
Cast steel	11 mm/0.4"	Standard URBACO paint RAL colors (optional)

Fittings	Functioning
- Lower limit switch - I.P.67 air distribution set (with valve 25m/27.3 yars air tube and connections).	According to PLC program The user will lower the bollard with a proximity card, remote control, digital keypad, etc. The bollard will automatically or manually rise again

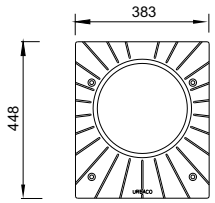

LEGEND :
1 - Casing
2 - cover
3 - bollard head
4 - reflecting tape

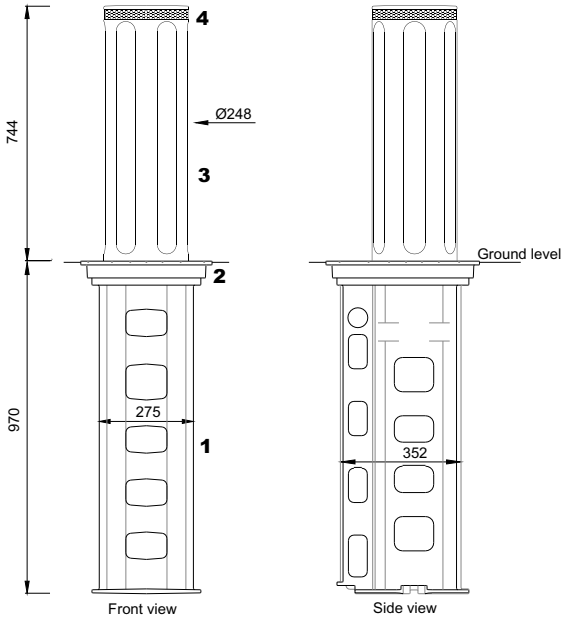

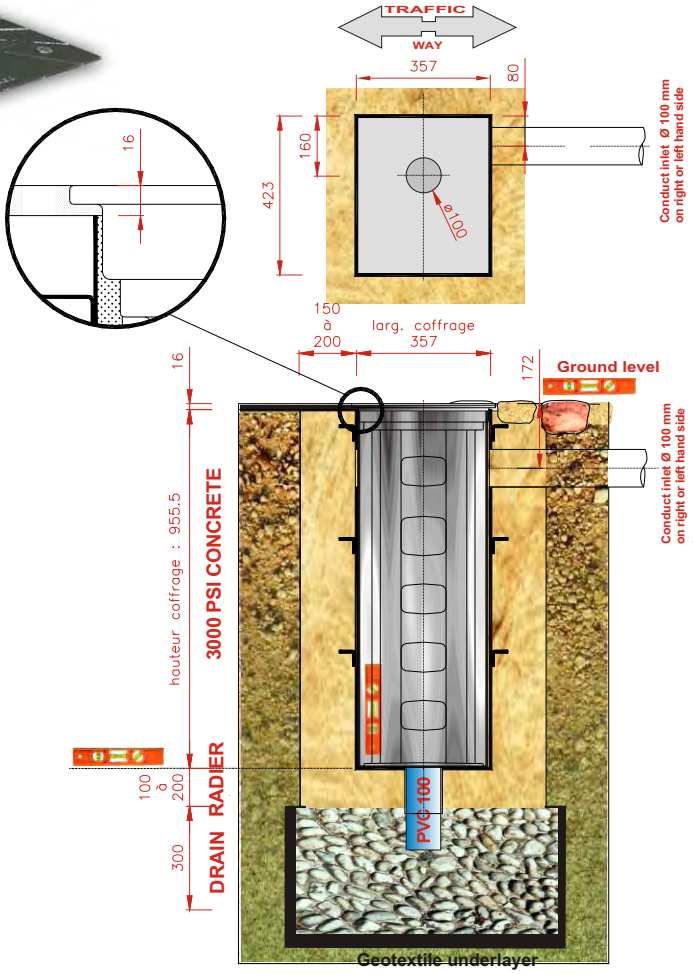

NOTA : Natural permeable soil for drainage.
(otherwise PVC tube should be connected to rainwater or sewage pipes)

INSTALLATION PLAN
for lost casing ref. BOCOFF954

Z.A. Du Couquiou - 84320 ENTRAIGUES - FRANCE
Tél. : (33) 04 90 48 08 08 - Fax : (33) 04 90 48 00 88
e-mail : urbaco@urbaco.fr

Propriété intellectuelle de URBACO - Ne peut être copié - Spécifications non contractuelles - Modifications possibles sans préavis

URBACO

Technical sheet

Pneumatic automatic retractable bollard

ATHENA Model Ø250/10", Height 750/30"

Ref. BPATNF75

Impact resistance	Tested durability	Weight
9,000 joules	4.5 Million operation cycles	154 Kg/339.51 lb

Material	Thickness	Colors
Cast steel	11 mm/0.4"	Standard URBACO paint RAL colors (optional)

Fittings	Functioning
- Lower limit switch - I.P.67 air distribution set (with valve 25m/27.3 yars air tube and connections).	According to PLC program The user will lower the bollard with a proximity card, remote control, digital keypad, etc. The bollard will automatically or manually rise again

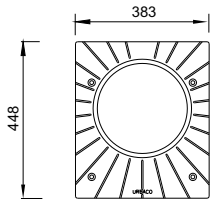

LEGEND :
1 - Casing
2 - cover
3 - bollard head
4 - reflecting tape

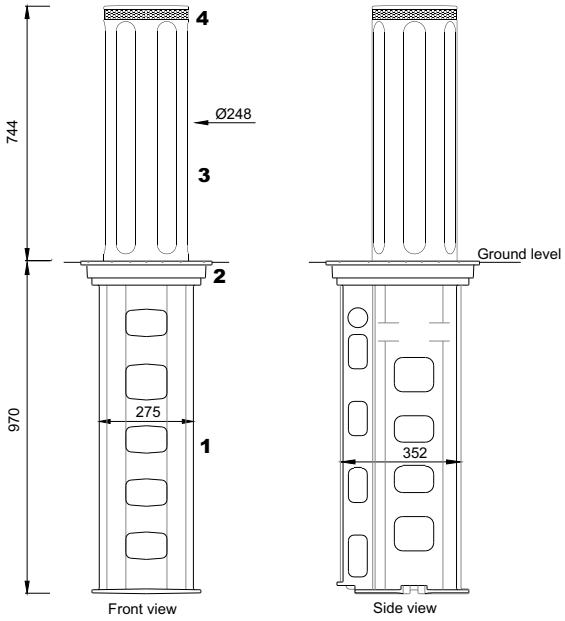

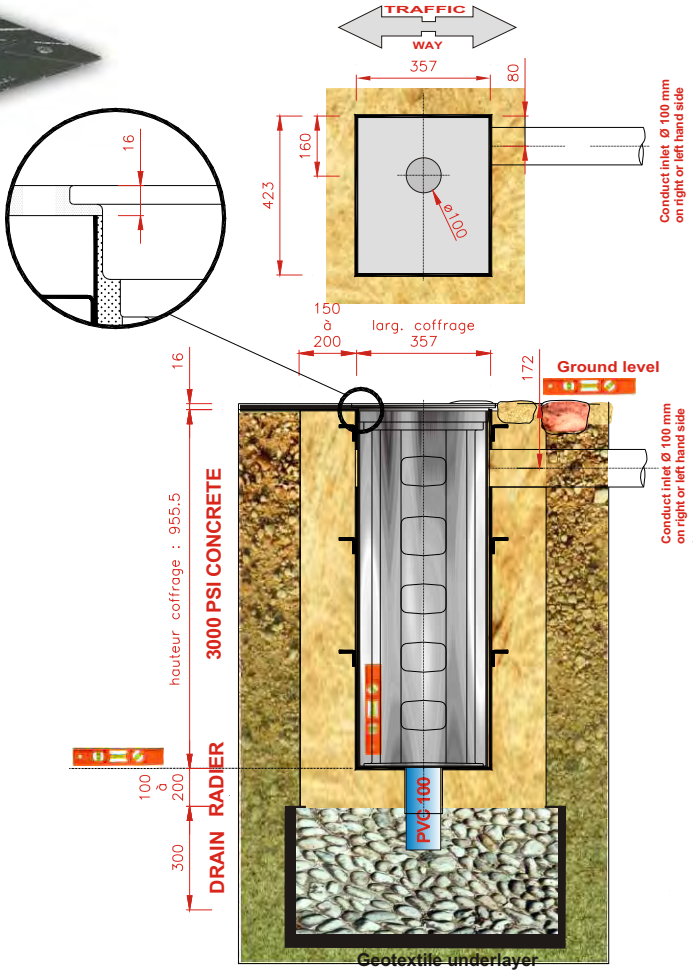

NOTA : Natural permeable soil for drainage.
(otherwise PVC tube should be connected to rainwater or sewage pipes)

INSTALLATION PLAN
for lost casing ref. BOCOFF954

Z.A. Du Couquiou - 84320 ENTRAIGUES - FRANCE
Tél. : (33) 04 90 48 08 08 - Fax : (33) 04 90 48 00 88
e-mail : urbaco@urbaco.fr

Propriété intellectuelle de URBACO - Ne peut être copié - Spécifications non contractuelles - Modifications possibles sans préavis